Design of LLC Resonant Converter with Integrated Magnetic Technology

Cheng Ruijun[1], Yang Yugang[1], Jiang Ying[1]

1Department of Electrical Engineering, Liaoning Technical University, Fuxin, 123000, China

Abstract—**Under the condition of 300~400v input voltage and 48v output voltage, this paper presents a thin-film integrated magnetic converter based on LLC resonant converter. In this paper, equivalent circuit of integrated magnetic components was gained and its working modes were discussed, then its design results were given. Thin-film technology was used to design integrated magnetic components. At last, its simulation results proved the validity of this design.**

I INTRODUCTION

The development of integrated circuit technology brings forward a strongly need of power supply with high density, low profile and high efficiency. High power density is limited by traditional PWM topology. At that time, LLC resonant circuit was invented to satisfy the working characteristics we desired. Some literatures [1] have proved that LLC resonant converter could reduce 40% of the total loss.

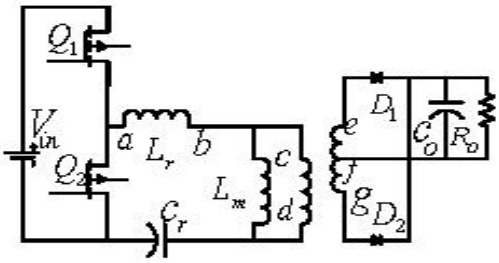

Fig. 1.circuit of LLC resonant converter

Based on the proposed LLC topology, magnetic integration technology is applied to integrate all the magnetic components in LLC resonant circuit into one magnetic core in this paper. In that case, the volume, the mass, the height and even the current ripple of magnetic component are reduced. At last, thin-film technology is used to design the integrated magnetic component.

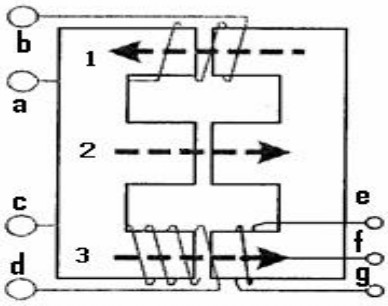

Fig. 2. Integrated magnetic component of LLC resonant converter

The circuit of LLC resonant converter is shown in Fig. 1. As we can see in Fig. 1, if there is no inductor Lm, this converter is the same as serial resonant converter, when Lm is added, the characteristics and the operation modes are completely changed. There are three passive components: Lm, Lr and Cr, secondary side is a rectifier with a center tap, after that a filter capacitor is connected. Primary side is a half bridge circuit, also it could be substituted by full bridge circuit or other circuit.

II ANALYSIS OF INTEGRATED MAGNETIC COMPONENT'S PRINCIPLE

In order to reduce the loss of magnetic component and its volume, this paper brings up LLC integrated converter. As is shown in fig. 2, windings of inductor are wrapped on column 1, and its corresponding flux isΦ_1, windings of transformer are wrapped on column3, and its corresponding flux isΦ_3, the flux of common column 2 isΦ_2. The aim of magnetic integration is to reduce the loss, the volume and the mass of magnetic component and to improve the effect of filtering. The LT structure in fig. 1 is similar to duplex winding transformer with the consideration of excitation inductor and primary leakage inductor. As it is difficult to control leakage inductance while the value of Lr is very important to resonant converter, an inductor is added to form a new resonant inductor Lr with leakage inductor. Lm is the excitation inductor of the transformer. Therefore, when considering the integration of magnetic components, only an inductor and a transformer are taken into account.

A Equivalent circuit of integrated magnetic component

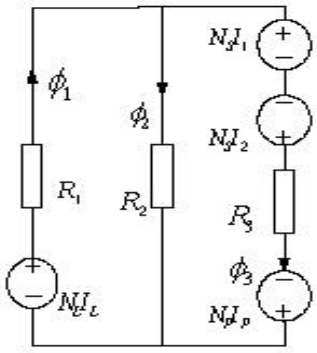

Fig. 3 (a) equivalent magnetic circuit of integrated magnetic component

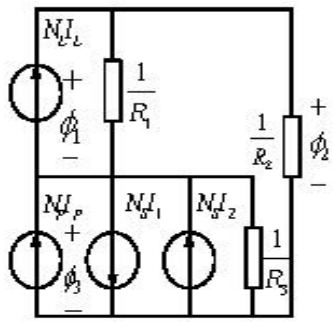

Fig. 3 (b) dual graph of equivalent magnetic circuit

Project supported by National Natural Science Foundation of China (50207004)

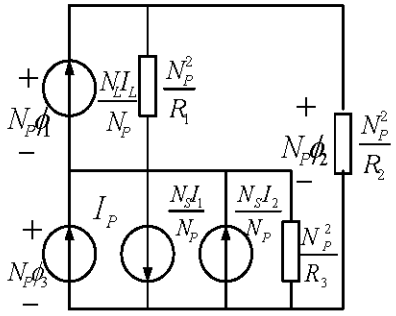

Fig. 3 (c) dual graph of equivalent magnetic circuit after equivalent transform

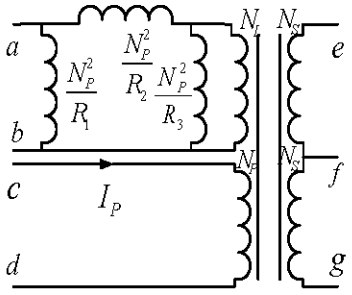

Fig. 3 (d) equivalent circuit of integrated magnetic component

By using the dual relationship of magnetic circuit and faraday's law of electromagnetic induction, equivalent circuit could be gained.

1) According to ohm's law, we could get the equivalent magnetic circuit of integrated magnetic component. N_L, N_P, N_S, N_S, I_L, I_P, I_1 I_2 are the turns number and current of windings ab, cd, ef and fg. R1, R2, R3 are magneto resistance of three column separately. Fig. 3 (a) is the equivalent magnetic circuit of integrated magnetic component.

2) Based on the dual relationship between magnetic circuit and circuit, dual graph of equivalent magnetic circuit could be obtained, as is shown in fig. 3 (b).

3) Take dimension scale transform to dual graph.

4) In accordance with dual graph of equivalent magnetic circuit after equivalent transform, using faraday's law of electromagnetic induction and impedance variation method of transformer [6], equivalent circuit of integrated magnetic component is obtained.

B Two operation modes of integrated magnetic component

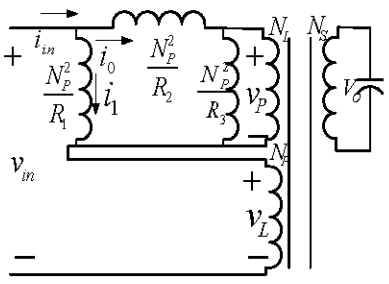

Fig. 4 (a) operation mode 1

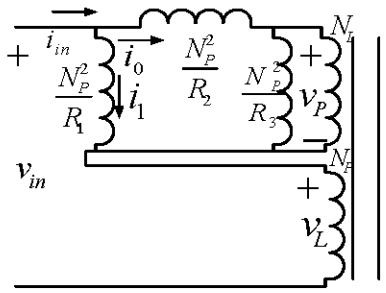

Fig. 4 (b) operation mode 2

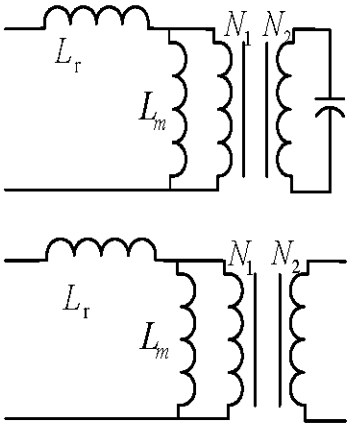

Fig. 4 (c) equivalent circuit of two operation modes

Given: $L_1 = \frac{N_P^2}{R_1}$; $L_2 = \frac{N_P^2}{R_2}$; $L_3 = \frac{N_P^2}{R_3}$; For mode 1, we could get:

$$L_1 \frac{di_1}{dt} + \frac{N_L}{N_P} v_P = v_{in} \quad L_2 \frac{di_0}{dt} + v_p + \frac{N_L}{N_P} v_p = v_{in}$$

$$v_P = \frac{N_P}{N_s} v_0 ; \qquad i_1 + i_0 = i_{in} ;$$

According to above 4 equations we could get following equation: $v_{in} = \frac{L_1 L_2}{L_1 + L_2} \frac{di_{in}}{dt} + v_0 \frac{1}{N_s} (N_P + N_L \frac{L_1}{L_1 + L_2})$;

Then: $L_r = \frac{L_1 L_2}{L_1 + L_2}$;

Let: $N_1 = N_P + N_L \frac{L_1}{L_1 + L_2}$;

For operation mode 2, similarly we could get

$$L_m = L_2 \frac{N_1^2}{N_L^2} \frac{L_1 + L_2}{L_1 + L_2 + L_3} .$$

In order to get the same value with discrete components [2], let the inductor value Lr 14μH, magneto inductor value Lm 60μH. Turn ratio of transformer 16:4:4, N_L=6, Np=10. Air gap of each magnetic column is 0.56mm..

III DESIGN OF LLC INTEGRATED CONVERTER WITH THIN-FILM TECHNOLOGY

Thin-film technology can make magnetic components change from 3D structure into 2D structure, and it will greatly reduce the dimension of magnetic components. In accompany with the development of the

soft magnetic material with low loss, high resistance, high saturate permeability, high start permeability, wide operation temperature and high operation frequency, magnetic components with high operation frequency come true, which provide a new way to achieve "short, small, light and thin" of switching power supply [3].

A Option of magnetic material

The difference lies between thin-film material and block material is the height. When film is thin enough, normally it is island structure. Continuous thin-film haven't formed, just like combination of some graininess objects, in which the swap action is feeble, when they are interrupted by heating, superparamagetism will occur. On condition of low vacuum, the graininess character of formed thin-film is low; while on the condition of high vacuum, it is high. So, when we are fabricating thin-film component, we should control its thickness in order to get the best characteristics.

As to the material with high permeability or with high operation frequency, skin effect is serious, and then it will bring large eddy loss. So, the main way to reduce eddy loss is to increase electrical resistivity, and it is also an important way to improve soft magnetism characteristics.

Because the excitation current of inductor is an alternating quantity, and its waveform, magnitude are the same, the magnetic material must has a narrow hysteresis cycle.

Literature [4] poses a good material CoNiZr, which has following merits: high electrical resistivity, saturation flux density Bs=1.25T, the area which hysteresis cycle surrounded is small, low self-loss. It is a good thin-film magnetic material. Based on above advances, this design will use CoNiZr as our magnetic core material.

B Option of thin-film inductor structure

Different design of wrap shape will lead different inductance, different chip area and will determine the complexity of fabrication process. Spiral type inductor, meander type inductor and cloth type structure inductor are the main types of inductor.

Compare the pros and corns of all the types [5], we choose spiral type inductor. Usually, the windings use photoengraving or ion etching method. Considering the cost and complexity, PCB is adopted to fabricate windings. PCB board can be used to make not only single-side board but also dual platen, even multi-layer board. Multi-layer board can enhance couple degree, and can get the inductance twice more than single-side due to L=L1+L2+2M. It's an available way to get larger inductance in every unit area. Fig. 5 is the scheme diagram of thin-film windings.

C Option of thin-film transformer structure

The main types of thin-film transformer are as follows: thin-film transformer based on common principal, thin-film transformer with coaxial windings, pinhole type thin-film transformer. For the sake of fabrication convenience, we choose thin-film transformer with coaxial windings. Its structure is shown in fig. 6.

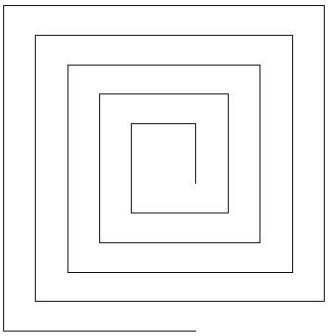

Fig. 5 scheme diagram of thin-film inductor windings

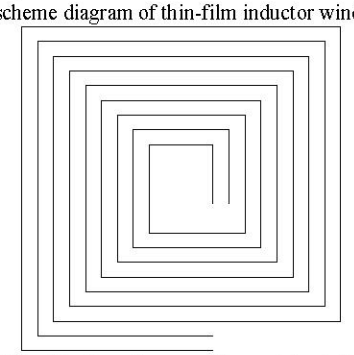

Fig. 6 thin-film transformer with coaxial windings

The base of thin-film transformer with coaxial windings is similar to lemniscate transformer, primary windings and secondary windings are arranged coaxially, magnetic lines of flux start from center of upside, and then end at underside. The transformer ratio is determined by the length of windings. In that case, we could control the ratio by use of control the length of windings. Otherwise, owing to the difference of proximity effect at the edge of thin-film, magnetic line of flux will be perpendicular to the surface of thin-film, and it will reduce the couple coefficient. The solving way is to increase the layer. In this paper, magnetic core is used to reduce magnetic-flux leakage, and then increase the couple coefficient.

D Design of inductor windings

1) Calculation of the copper foil: $w = \frac{i_{max}}{hj}$; where h represents the thickness of copper foil, and normally it is less than twice of skin depth; j is the current density; i_{max} is the largest current; w represents the copper foil width.

2) Calculation of isolate dielectric-slab: set the area of isolate dielectric-slab as the area of inductor windings. According to $c = \frac{\varepsilon_0 \varepsilon_r A_L}{h_d}$, the thickness of isolate dielectric-slab h_r will be determined. Where c is the capacitance, ε_0 is the dielectric constant of vacuum, ε_r is the dielectric constant of the dielectric-slab, A_L represents the area of inductor windings.

Set two layers of the thin-film inductor as a basic unit, a_1, b_1, c_1, d_1 are the connecting terminal of upper layer and bottom layer separately. The equivalent circuit of every basic unit is shown in fig. 7.

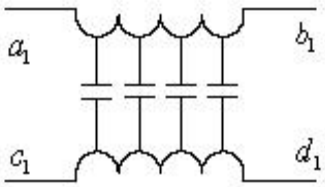

Fig. 7 equivalent circuit of basic unit

The two layers of basic unit can bring capacitor, while the LLC resonant converter needs capacitor Cr, then we want to make use of this capacitor. The distance between two layers is controllable, we can adjust the space between two layers in order to get the capacitor we need. According to 1), the width of copper foil is 2.5mm, the distance between two lines is 0.5mm, the depth is 0.105. According to 2), the distance between two layers is 0.7mm.

E Design of thin-film transformer

The schematic diagram of thin-film transformer is shown in fig. 6, and we also set two layers as a basic unit, as the transformation ratio is determined by the length, on the upper side, we set out flank of the windings as primary winding, inner flank as the secondary winding, while the bottom side is quite the reverse, in that case, primary winding and the secondary winding are the same length in every basic unit. By connect the basic units in series and parallel, we could get random ratio thin-film transformer. In this paper, for the sake of reducing the height in maximum extent, we only use one basic unit, and it also brings much more difficulty in fabricate technology. There is only one basic unit in this design, draw a terminal from the middle of secondary windings, then connect two secondary windings' terminals together. We could get a transformer with the ratio of 1:2, then we draw a terminal from the middle of new secondary windings. At last, we get the transformer with the ratio of 4:1:1. In order not to influence Cr, the dielectric material between transformer windings should as small as possible.

F Design of thin-film integrated magnetic component

According to the technology, we could get the appropriate thin-film integrated magnetic component, which satisfied the circuit well, and we use magnetic control sputtering to fabricate the magnetic core. Since the magnetic core could result large leakage at the side columns, we change the magnetic structure from EI to the shape just like a Chinese character "四" as is shown in fig. 8.

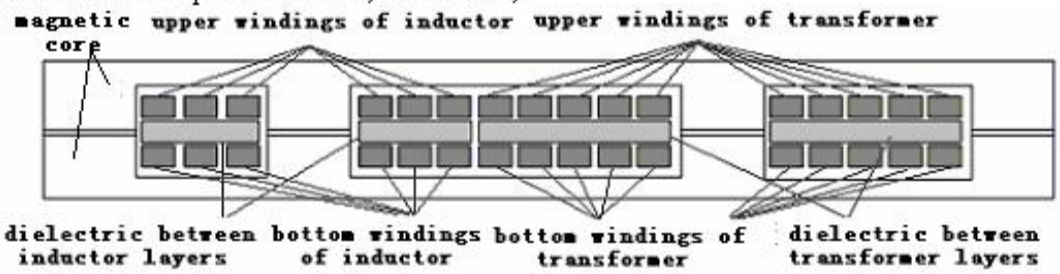

Fig. 8 cross-section of thin-film integrated magnetic component

IV SIMULATION RESULTS

According to the above analysis, we use Maxwell SV to do simulation. The parameters of thin-film integrated magnetic component are as follows: the width of copper foil is 2.5 mm, depth is 0.105 mm, space between coppers is 0.5mm, air gap is 0.56mm, thickness of isolate dielectric is 0.7mm, height of magnetic core is 5mm. The simulation result is shown as 9(b). 9(a) is the simulation result of traditional integrated magnetic component. Compare the simulation results, we could find that after designed by thin-film technology, the height of integrated magnetic component reduced more, and meet the demand of "thin, short, light, small", further more it adapt the needs of the development of SMT technology, and make large scale commercial process possible. In addition, the flux density of thin-film integrated magnetic is large, which made high use of magnetic component. At the same time, it could bring flux saturation, but as a new type soft magnetic material CoNbZr with high saturation flux density is used, this contradiction could alleviate greatly.

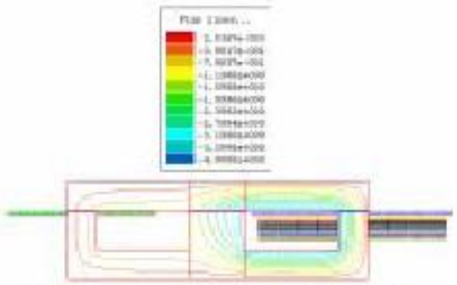

Fig. 9 (a) simulation result of traditional integrated magnetic component

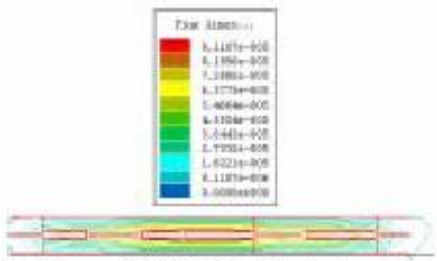

Fig. 9 (b) simulation result of thin-film integrated magnetic component

V CONCLUSION

This paper has designed the thin-film integrated magnetic component of LLC resonant converter, derived the equivalent circuit of integrated magnetic component, discussed its operation modes, listed the design results, and then designed the thin-film integrated magnetic component using thin-film technology, at last, simulation results were given. This design shows a great superiority, makes a highly use of magnetic core and its thickness is only 5mm, which accommodates the demand of SMT technology and achieves "short, small, light and thin" of LLC resonant converter.

ACKNOWLEDGMENT

Thanks to Miss. Liang for his assistance and I'm grateful to Dr. Yang for his encouragement and valuable suggestions.

REFERENCE

[1] Bo Yang, Fred C. Lee, "LLC Resonant Converter for Front End DC/DC Conversion" IEEE Trans. 2002, P1108-1112.

[2] Bo Yang, Ren-gang Chen, Fred C. Lee, "Integrated Magnetic for LLC Resonant Converter" IEEE Trans. 2002, P346-351

[3] Yu-gang Yang, Magnetic Technology in Modern Power Electronics. Beijing: Science Technology Press, 2003.8.

[4] Xiao-li Tang. Fabrication of IT used thin-film inductor. The Magisterial Thesis of Electronic Science Technology University, 2001. 9.

[5] Xiao-li Tang, Hua Su, Huai-wu Zhang, Research and Development Situation of Planner Thin-film Inductor. Magnetic Material and Device, 2003.4 vol34, No.2, P37-38.

[6] Qian-hong Chen, Xin-bo Ruan, Yang-guang Yan. Design of High Efficiency, Low Voltage Flyback-Forward Converter With Integrated Magnetics. Transaction of Electrotechnics, 2002.2, vol17, No.1, P53-58.